A67.25.V2.M.LH

SHOWER SET

3 STAR/9Lpm WELS RATING

AVAILABLE WITH:

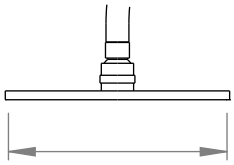

250mm OVERHEAD ROSE
A67.25.V2.M.LH.250

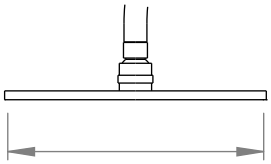

300mm OVERHEAD ROSE
A67.25.V2.M.LH.300

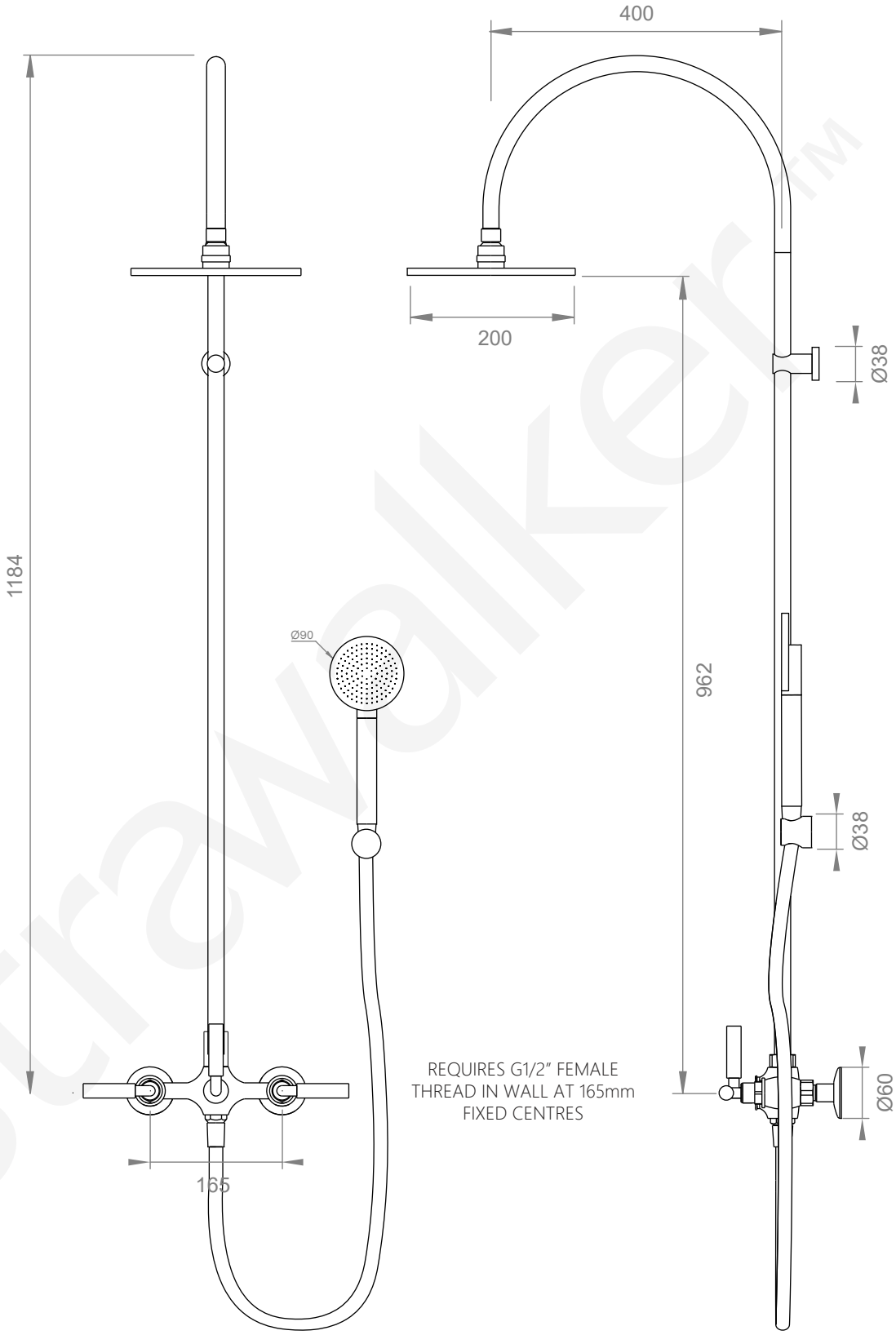

HOSE LENGTH 1.5m