WALL SET ON BACKPLATE

INSTALL TO SUIT ALL ASTRA WALKER WALL SETS WITH BACKPLATE

INSTALLATION TO SUIT:

A69.05.OBP
A69.06.OBP
A69.06.250.OBP

A69.05.V2.OBP
A69.06.V2.OBP
A69.28.OBP

A69.28.V2.OBP
A69.29.OBP

- Tapware to be installed by a licenced plumber in accordance with AS/NZS 3500:2003
- Recommended working water pressure 150 - 500kPa
- Maximum water temperature is 65 deg C
- After completing the installation check function of tapware and ensure no water leaks.

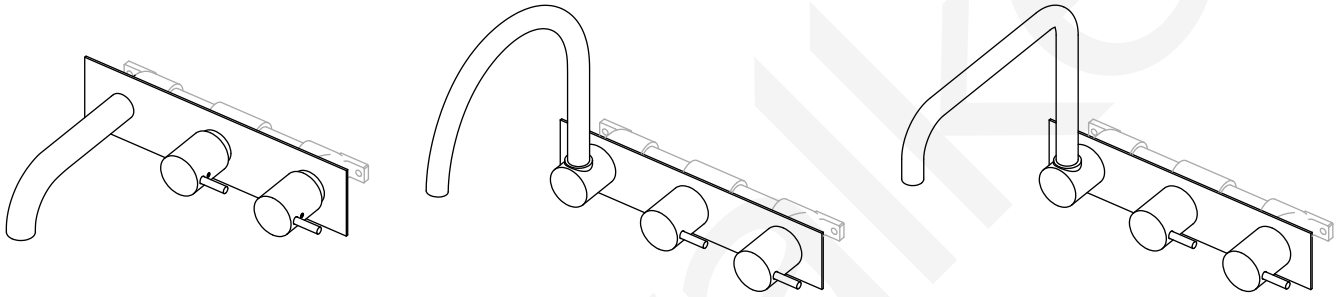

NOTE : BREECH SUPPLIED

Install the wall breech supplied to a secure nogging at the correct depth as shown in the drawing below.
Ensure the breech is square and parallel between the wall studs.
To allow the tapware to fit correctly the thickness of the finished wall surface must be calculated prior to 'rough-in'.

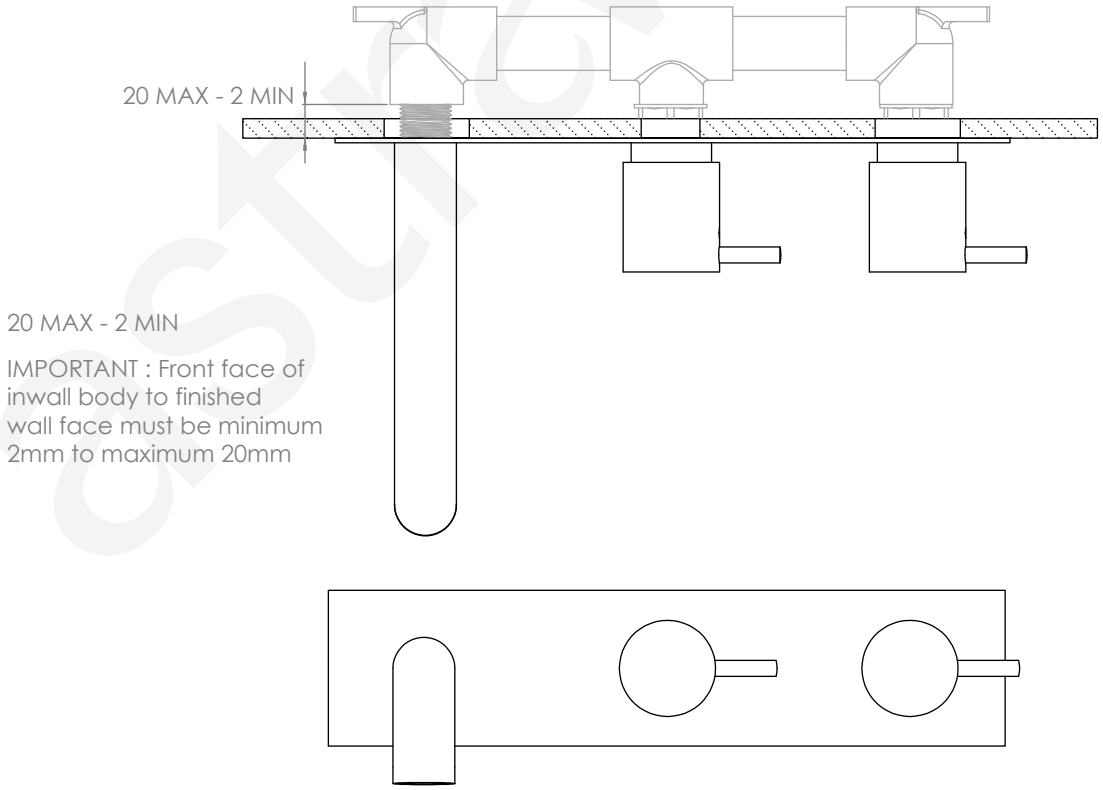

WALL SET ON BACKPLATE

INSTALL TO SUIT ALL ASTRA WALKER WALL SETS

Ensure water lines are completely flushed prior to fitting of spindles.

Install the spindles hand-tight until the seal of the spindle firmly makes contact with the seat. Do not overtighten. Do not tighten seal using the spindle.
Fit washer and screw down locknut over the spindle using an appropriate tube spanner and tighten.

NOTE: Over-tightening the spindles could damage the ceramic discs and in turn, void the manufacturer's warranty.

Seal the wall around the spindle and fit the flange to meet the finished wall surface.
Attach handle to the handle insert and adjust into correct position, and tighten well using an Allen Key.

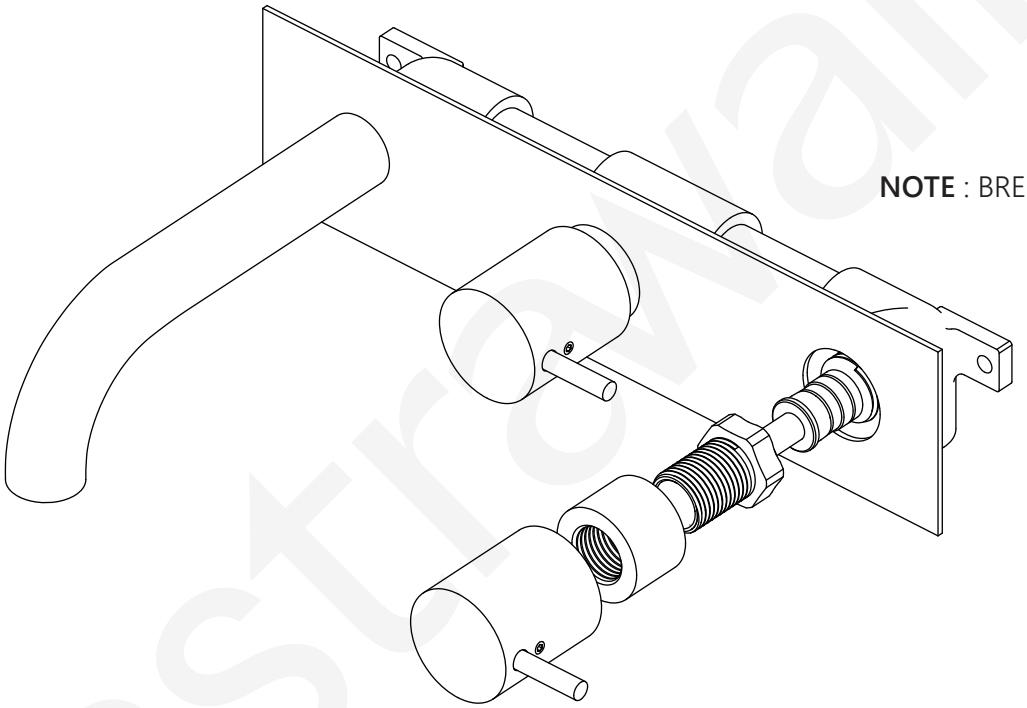

NOTE : BREECH SUPPLIED

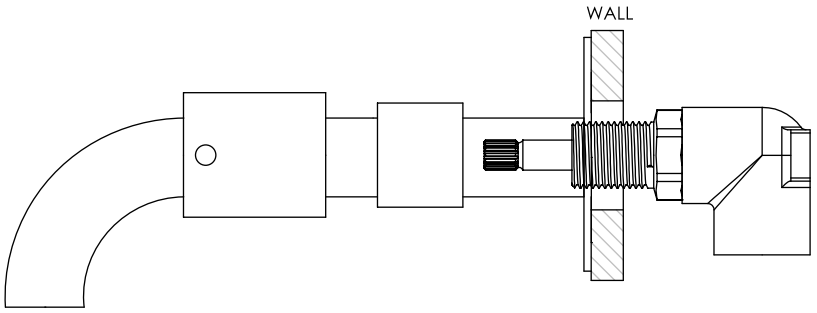

astrawalker ™