KITCHEN SET WITH PULL OUT DUAL SPRAY

6 STAR/3.5Lpm WELS RATING

INSTALL TO SUIT

A67.08.V8.T	A67.08.V8.T.LH	A68.08.V8.T.KN	A69.08.V8.T	A81.08.V8.T
A67.08.V8.O	A67.08.V8.O.LH	A68.08.V8.O.KN	A69.08.V8.O	A81.08.V9.T
A67.08.V9.T	A67.08.V9.T.LH	A68.08.V9.T.KN	A69.08.V9.T	
A67.08.V9.O	A67.08.V9.O.LH	A68.08.V9.O.KN	A69.08.V9.O	

- Tapware to be installed by a licenced plumber in accordance with AS/NZS 3500:2003
- Recommended working water pressure 150 - 500kPa
- Maximum water temperature is 65 deg C
- After completing the installation check function of tapware and ensure no water leaks.

1) Ensure water lines are completely flushed prior to connections.
2) Remove fixing nut and washers on assembled hot and cold handles.
3) Remove fixing nut & washers including the lead weight on the pull-out spout.
4) Place both items into position, and lower onto the mounting surface.
5) From the underneath secure washers and fixing nuts from breech to hot and cold handles and spout.
6) Connect the flexible pull-out hose on the spout to the breech.
7) Connect the lead weight to the flexible pull-out hose so that the handpiece fully retracts into the tap body.
8) Connect the hot and cold water supplies to isolating stop cocks.

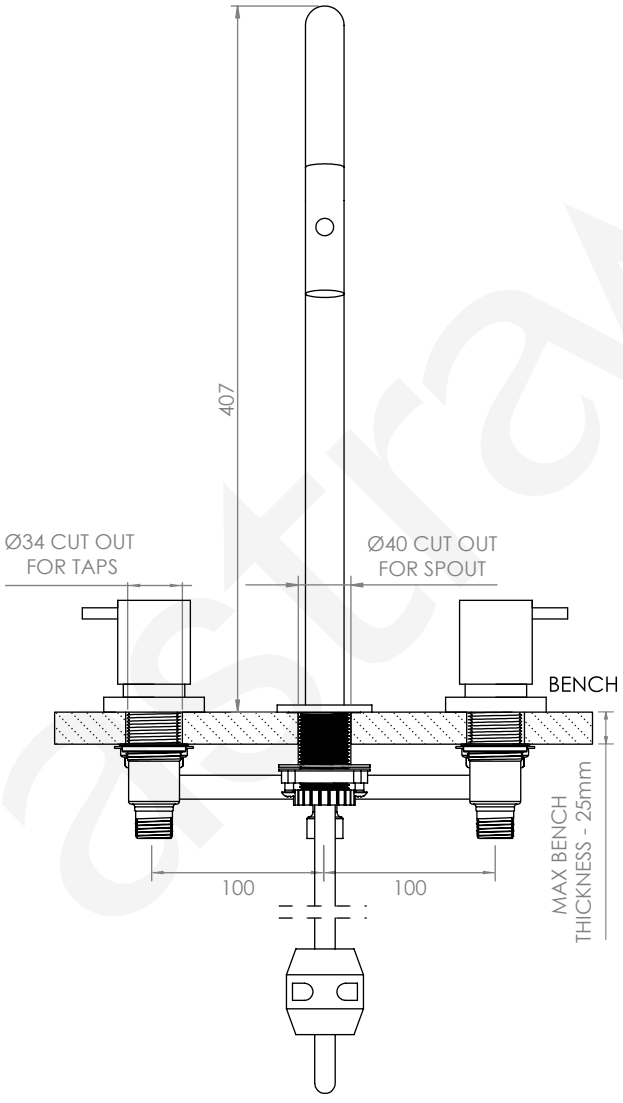

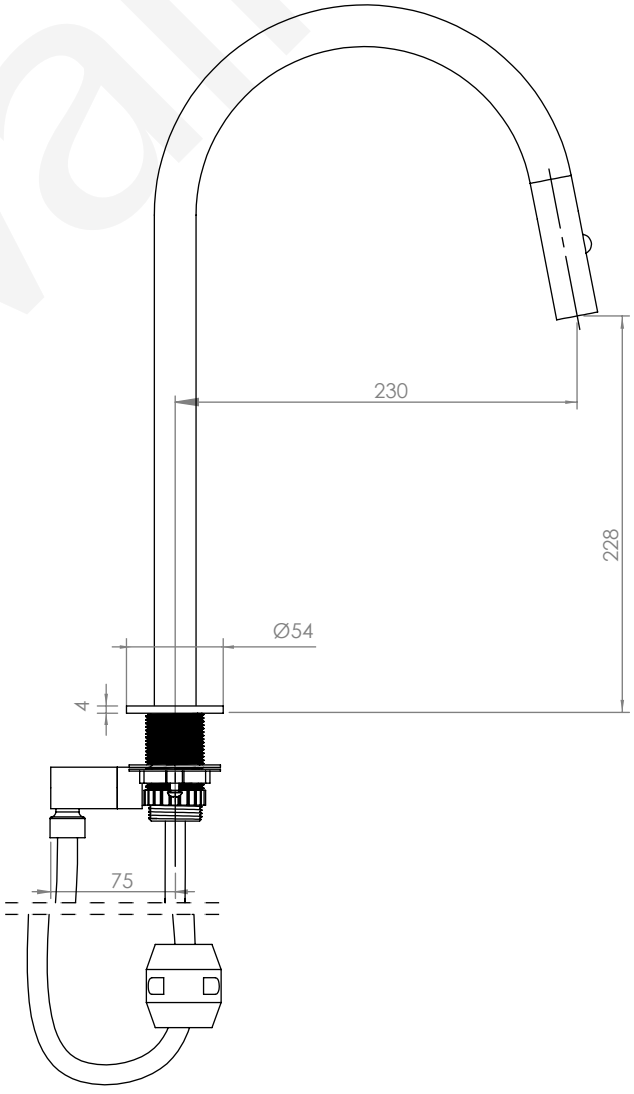

KITCHEN SET WITH PULL OUT DUAL SPRAY

6 STAR/3.5Lpm WELS RATING

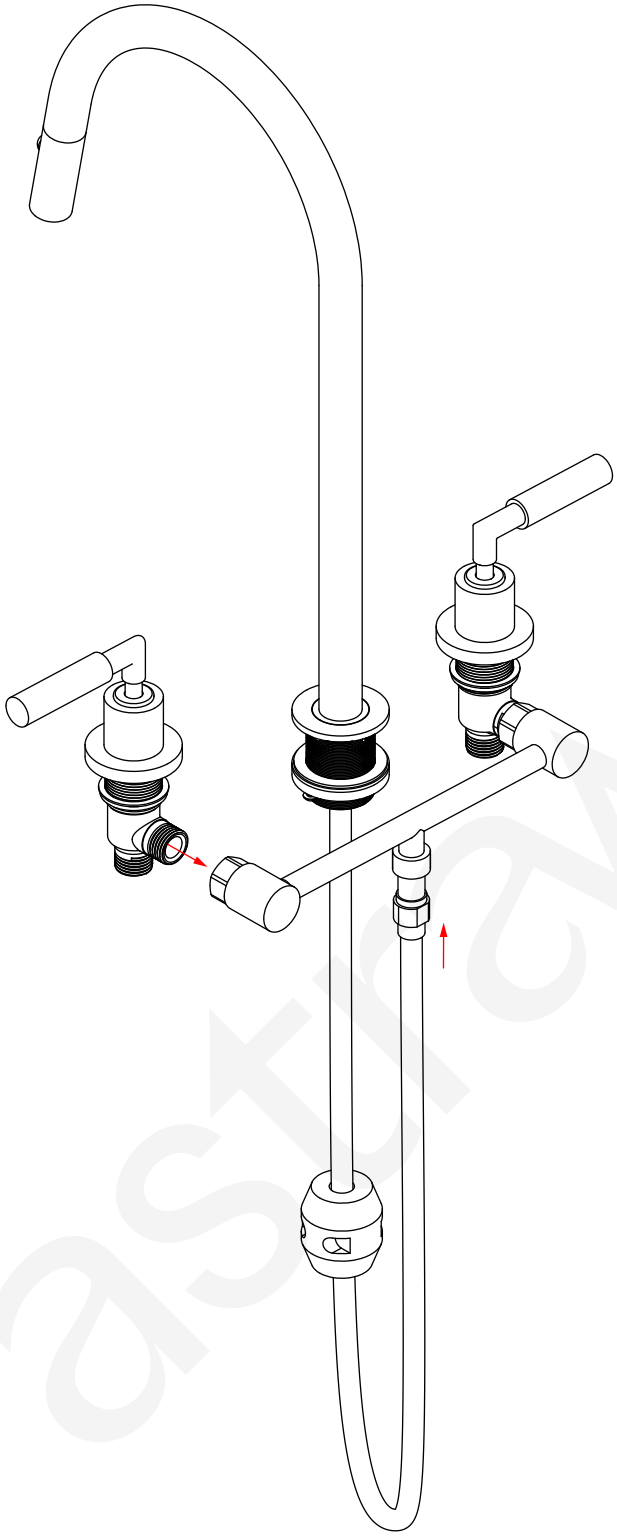

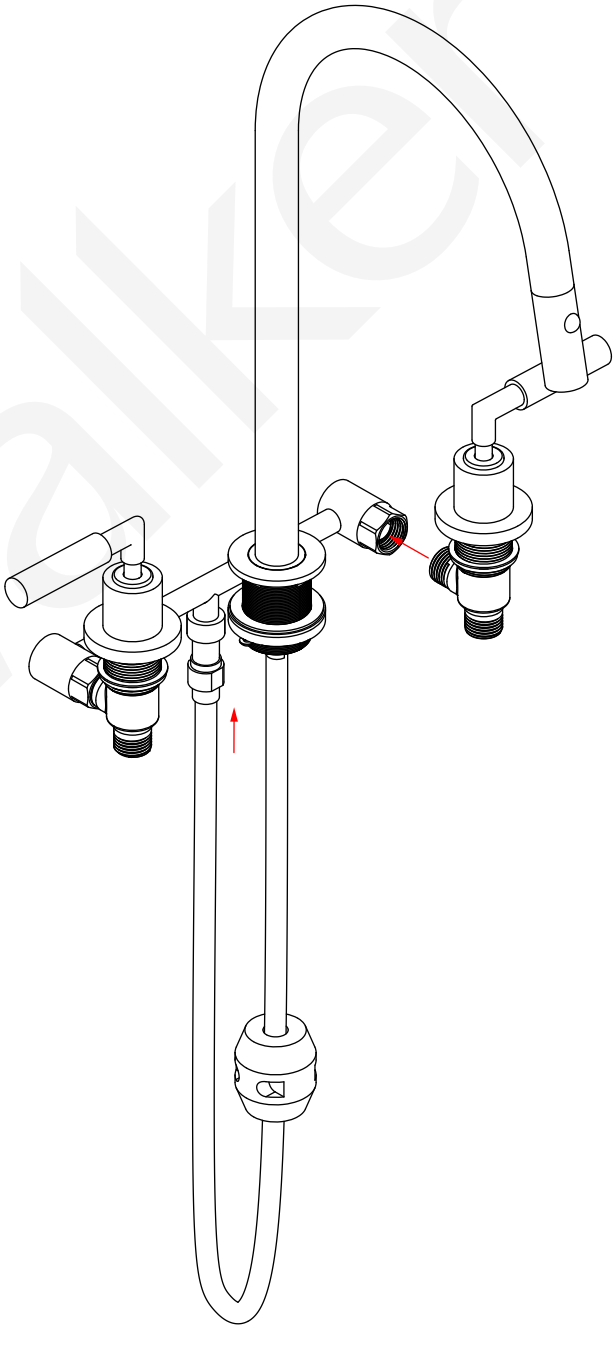

astrawalker ™