A67.25.V4.M.LH
SHOWER SET
3 STAR/9Lpm WELS RATING

STANDARD AS 200mm OVERHEAD ROSE
AVAILABLE WITH:

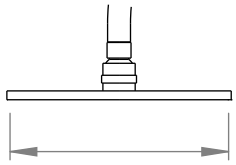

250mm OVERHEAD ROSE
A67.25.V3.LH.250

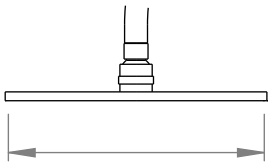

300mm OVERHEAD ROSE
A67.25.V3.LH.300

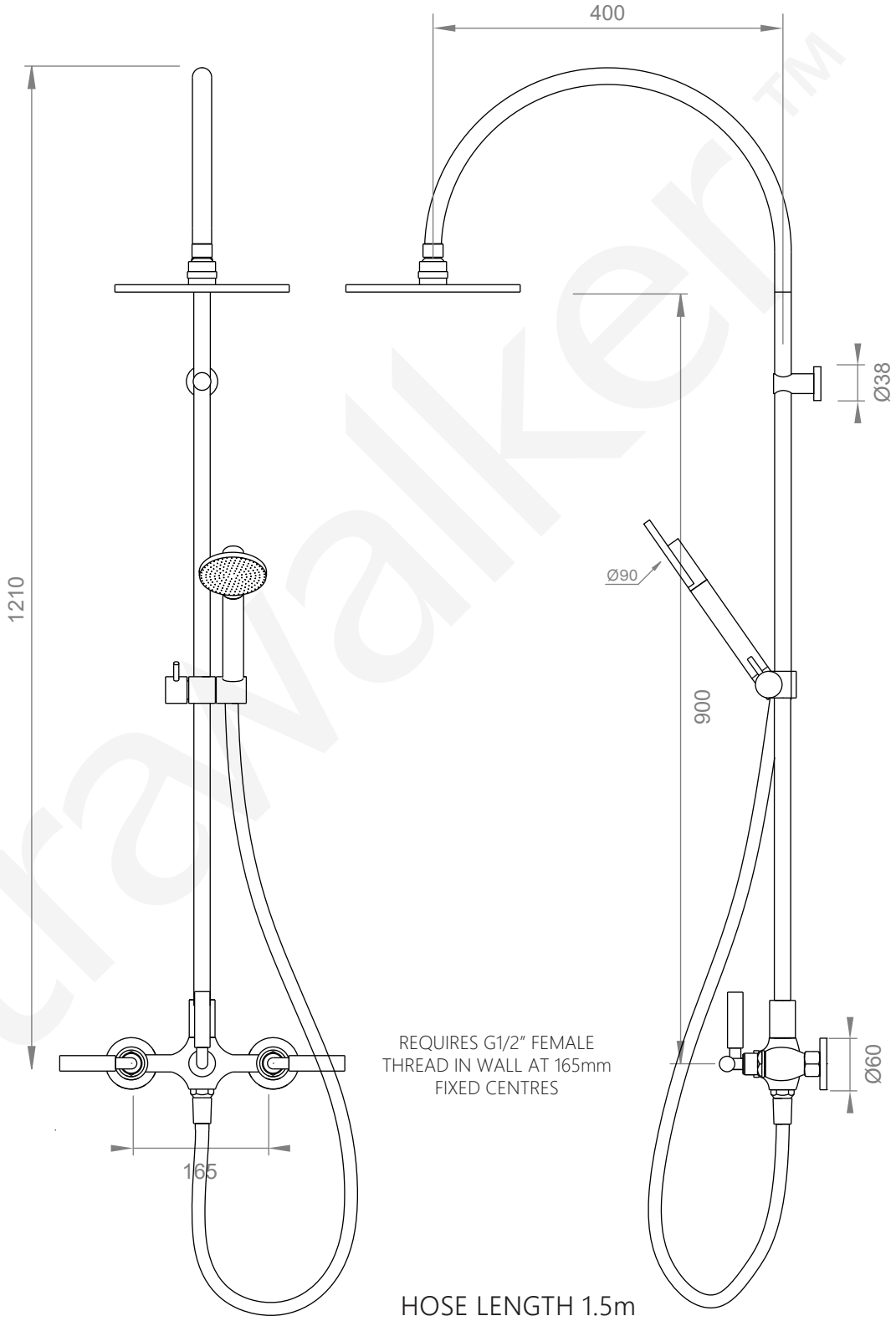

HOSE LENGTH 1.5m