A68.25.KN
SHOWER SET
3 STAR/9Lpm WELS RATING

STANDARD AS 200mm OVERHEAD ROSE
AVAILABLE WITH:

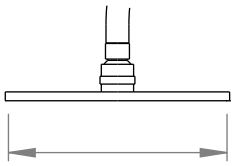

250mm OVERHEAD ROSE
A68.25.KN.250

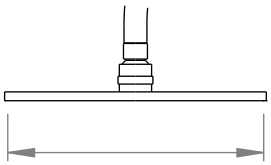

300mm OVERHEAD ROSE
A68.25.KN.300

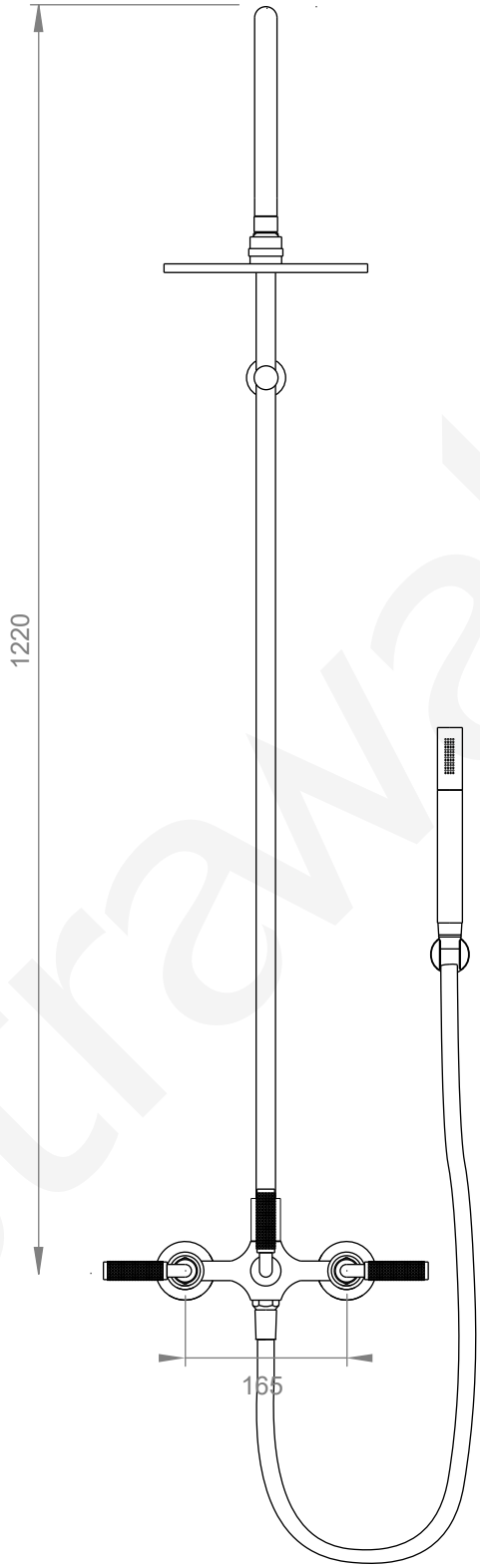

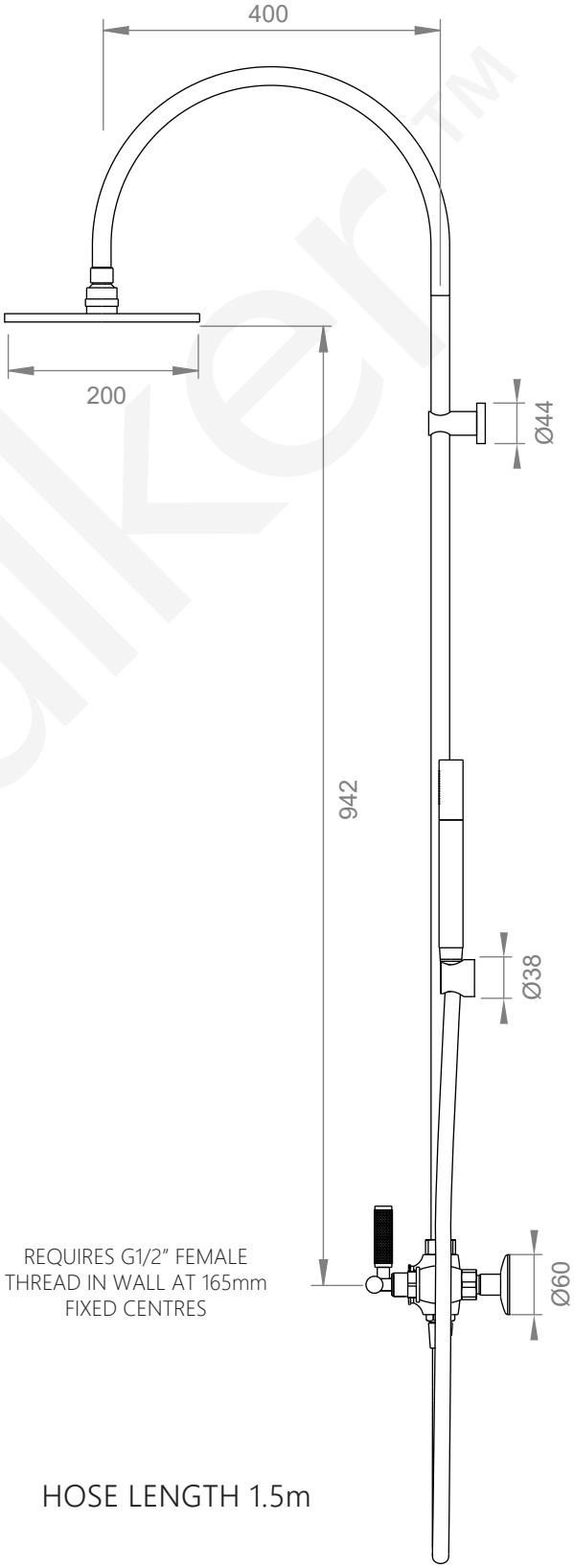

REQUIRES G1/2" FEMALE
THREAD IN WALL AT 165mm
FIXED CENTRES

HOSE LENGTH 1.5m

astrawalker™