A67.25.V4
SHOWER SET
3 STAR/9Lpm WELS RATING

STANDARD AS 200mm OVERHEAD ROSE
AVAILABLE WITH:

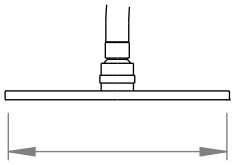

250mm OVERHEAD ROSE
A67.25.V4.250

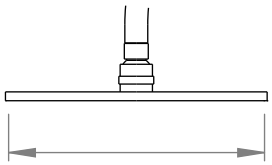

300mm OVERHEAD ROSE
A67.25.V4.300

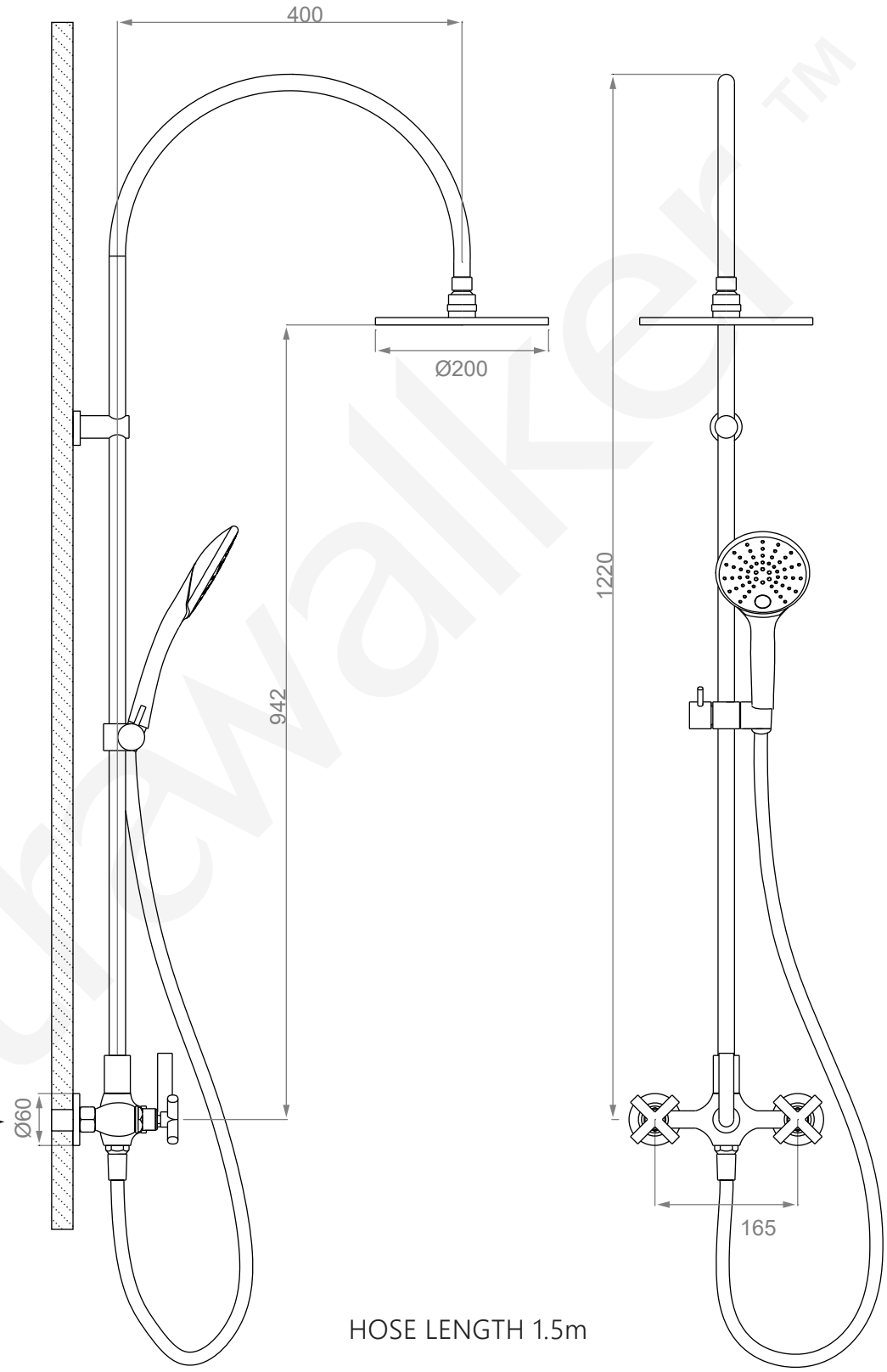

NOTE: REQUIRES G 1/2'' FEMALE
THREAD IN WALL

HOSE LENGTH 1.5m

astrawalker ™