A52.23

BATH /SHOWER SET & HANDPIECE

3 STAR/9Lpm WELS RATING - SHOWER & HANDSHOWER ONLY

STANDARD WITH METAL CROSS HANDLE
OTHER LEVER HANDLE OPTIONS

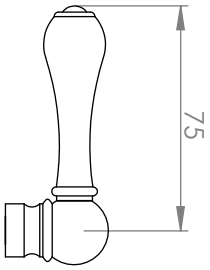

.ML METAL LEVER

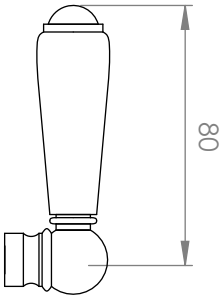

.PL WHITE PORCELAIN
.BL BLACK PORCELAIN
.CK CRACKLE PORCELAIN

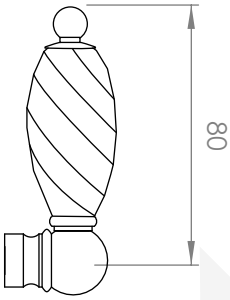

.CL SWAROVSKI CRYSTAL

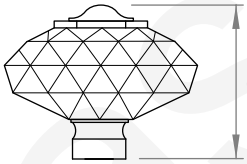

.CC CRYSTAL CROSS

AVAILABLE WITH:

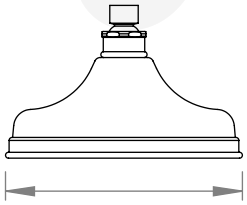

200mm OVERHEAD ROSE
A52.23.200

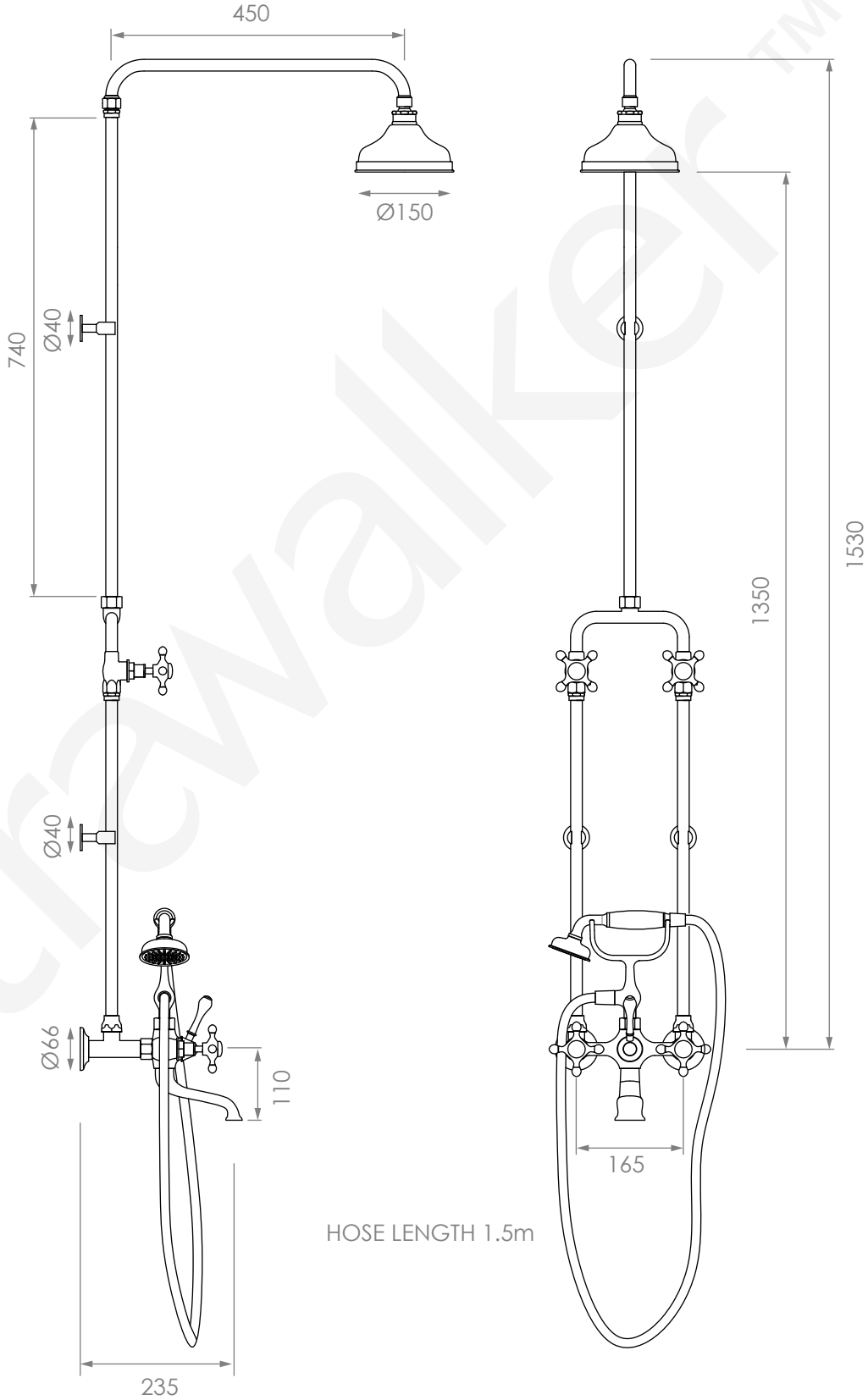

HOSE LENGTH 1.5m

astrawalker™