A51.13
SHOWER SET
3 STAR/9Lpm WELS RATING

STANDARD WITH METAL CROSS HANDLE
OTHER LEVER HANDLE OPTIONS

AVAILABLE WITH:

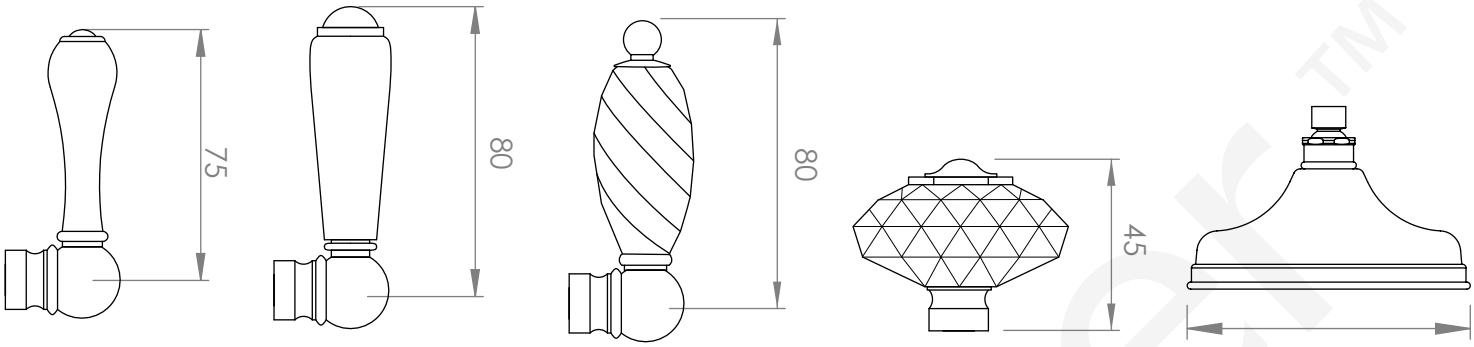

.ML METAL LEVER

.PL WHITE PORCELAIN
.BL BLACK PORCELAIN
.CK CRACKLE PORCELAIN

.CL SWAROVSKI CRYSTAL

.CC CRYSTAL CROSS

200mm OVERHEAD ROSE
A51.13.200

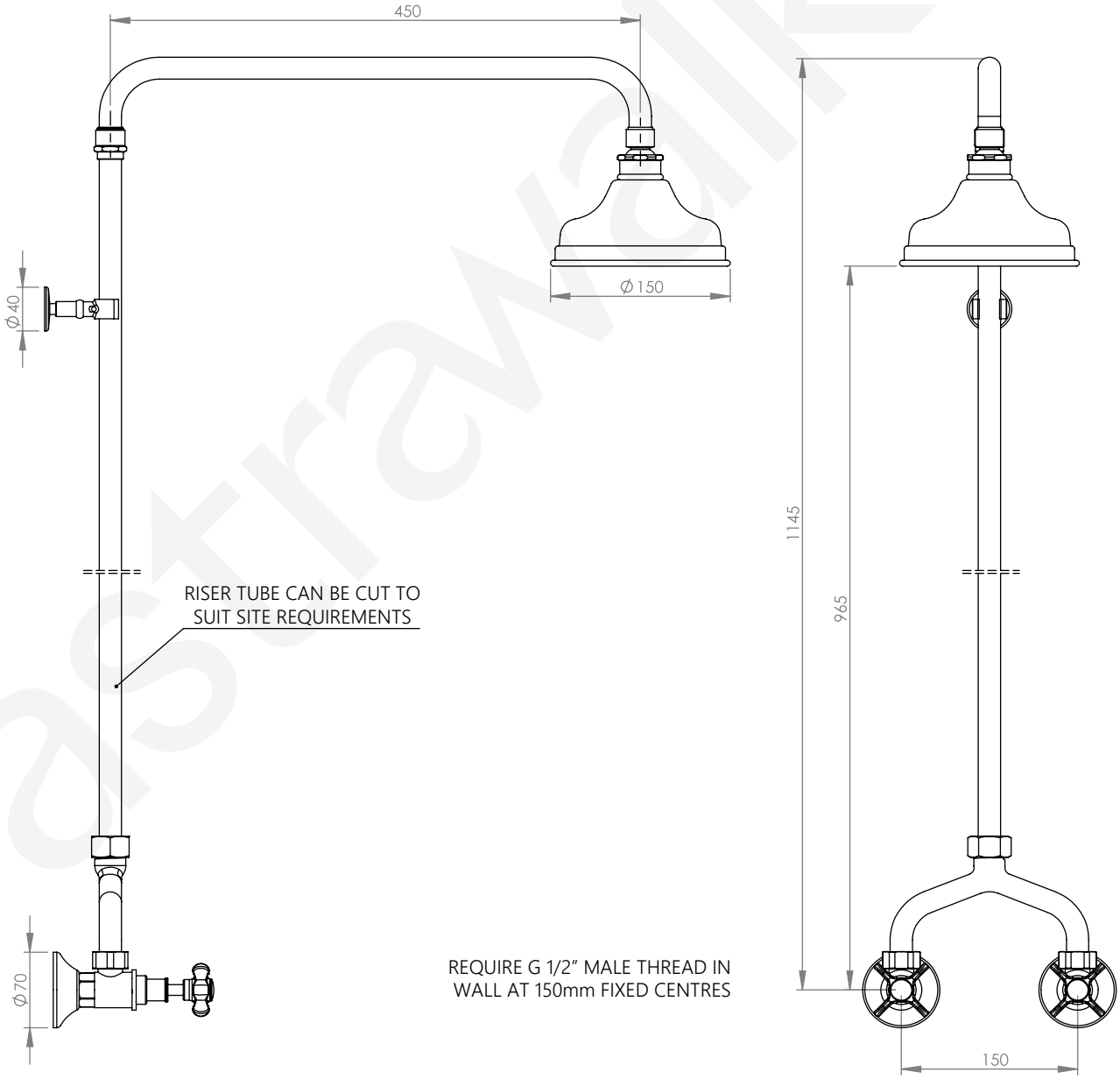

astrawalker™